SMART ETHERNET BOX

Outdoor Smart Ethernet Box

Model SBOX1802SFG-I

Overview

The SBOX1802SFG-I is an outdoor industrial PoE switch box featuring 8 × Gigabit PoE ports and 2 × Gigabit SFP slots. Designed for harsh environments with an operating temperature range of -40°C to +75°C, it provides industrial-grade surge protection, making it ideal for outdoor surveillance, intelligent transportation, rail transit, and smart city applications. Equipped with Maxsol's Smart DIP Switch, it supports Watchdog, VLAN Isolation, Port Isolation, and Port Priority (QoS), ensuring stable, reliable, and efficient network performance.

Features

- 8*10/100/1000M PoE ports+2*100/1000M SFP port Industrial PoE Switch, port 1-8 support IEEE 802.3af/at;
- Support AI Watchdog, Port isolation, VLAN, Port Priority +QOS
- Pin Assignment 1,2,3,6
- Input voltage: AC100-240V, 50/60Hz
- PoE port1~port8 support AF/AT intelligent recognition. Standard power is 15.4W/port, Maximum power is 30W/port;
- Comply with IEEE 802.3, IEEE 802.3u, IEEE 802.3ab, IEEE 802.3z standards;
- Operation TEMP:-40~75°C
- IP protection level: IP65;

Specification

MAXSOL South Africa

Specification

Model	SBOX1802SFG-I

Interfaces

Interface	8*10/100/1000Base-T PoE ports (Data/Power) 2*100/1000Base-X uplink SFP fiber slot port (Data)
Ethernet Port	Port 1-8 support 10/100/1000Base-TX, auto-sensing, Full/half duplex MDI/MDI-X self-adaption
DIP Switch	AI Watchdog, Port isolation, VLAN, Port Priority +QOS

PoE

PoE Standard	IEEE802.3af/at
SFP Port	Gigabit SFP optical fiber port, default matching optical modules (optional order single-mode / multi-mode, single fiber / dual fiber optical module. LC)
Power Adaptor	300 W

Physical Characteristics

LED Indicators	PWR, OPT, NMC, ALM
Power Interface	AC Input
Optical Cable	Multimode: 850nm 0 ~ 550M, single mode: 1310nm 0 ~ 40KM, 1550nm 0 ~ 120KM.
Network Topology	Support Star topology, Bus topology, Tree Topology, Hybrid topology
Input voltage	AC100-240V, 50/60Hz
Total Power consumption (POE)	< 246 W
Voltage Alarm	Support

Fan

RPM	3000 ±10%
SIZE	92*92*25mm
Power Input	220V

MCB(Miniature Circuit Breaker)

Rated operational voltage (Ue)	230/400V AC
Rated current	6-63 A
Rated frequency	50Hz
Working Temperature	-35℃+75℃
Protection Class	IP40

Environment

Operating temperature	-40℃~+75℃ The device is tested for 4 hours at temperatures in 85℃
Storage temperature	-40℃~+85℃
Relative humidity	5%~95% non-condensing
Thermal methods	Auto Fans Cooling
MTBF	100,000 hours

EMC & Ingress Protection

IP Level	IP65
Surge protection of Power	IEC 61000-4-5 Level X (8KV/6KV)
Surge protection of Ethernet port	IEC 61000-4-5 Level X (8KV/6KV)
RS	IEC 61000-4-3 Level 3 (10V/m)
EFI	IEC 61000-4-4 Level 3 (1V/2V)
CS	IEC 61000-4-6 Level 3 (10V/m)
PFMF	IEC 61000-4-8 Level 4 (30A/m)
DIP	IEC 61000-4-11 Level 3 (10V)

ESD	IEC 61000-4-2 Level 4 (8K/15K)

Cabinet

Product size	450X500X284mm
Installation Method	Wall Mounting/Pole Mounting

Products Size Overview

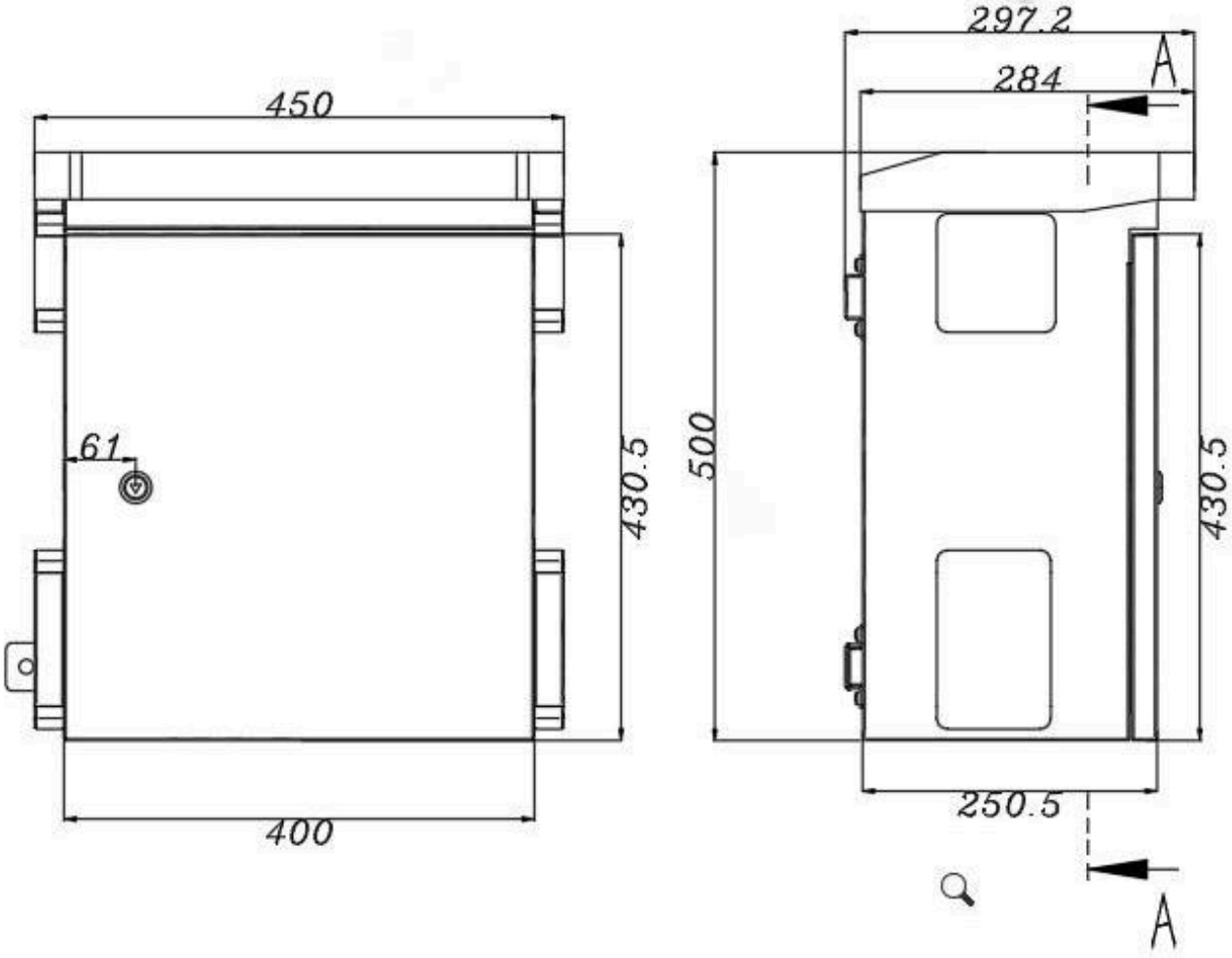

Product dimensions and installation reference

Product Overview

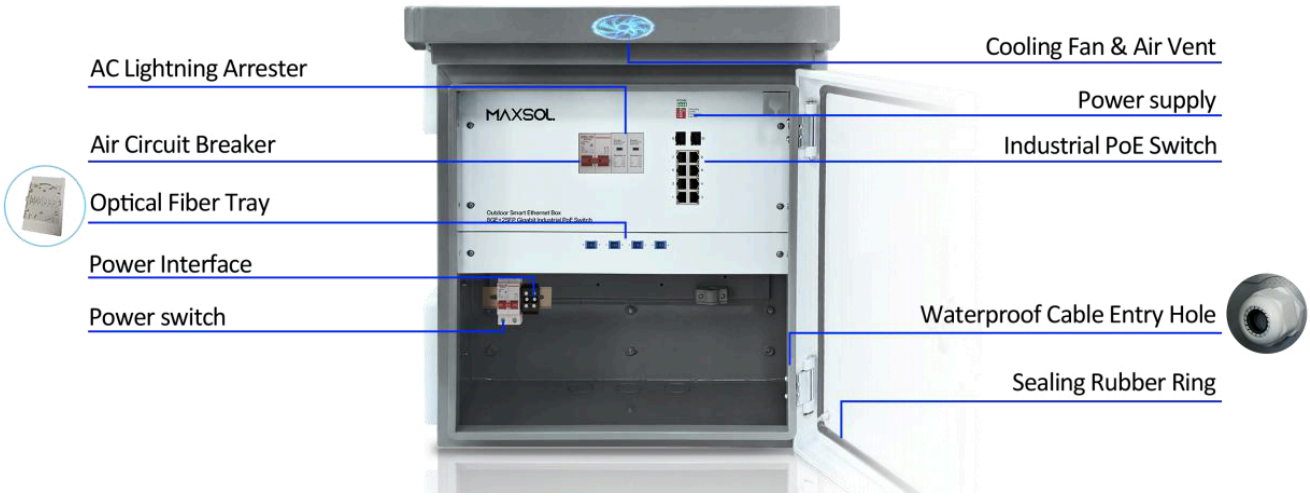

Product dimensions and installation reference

Installation

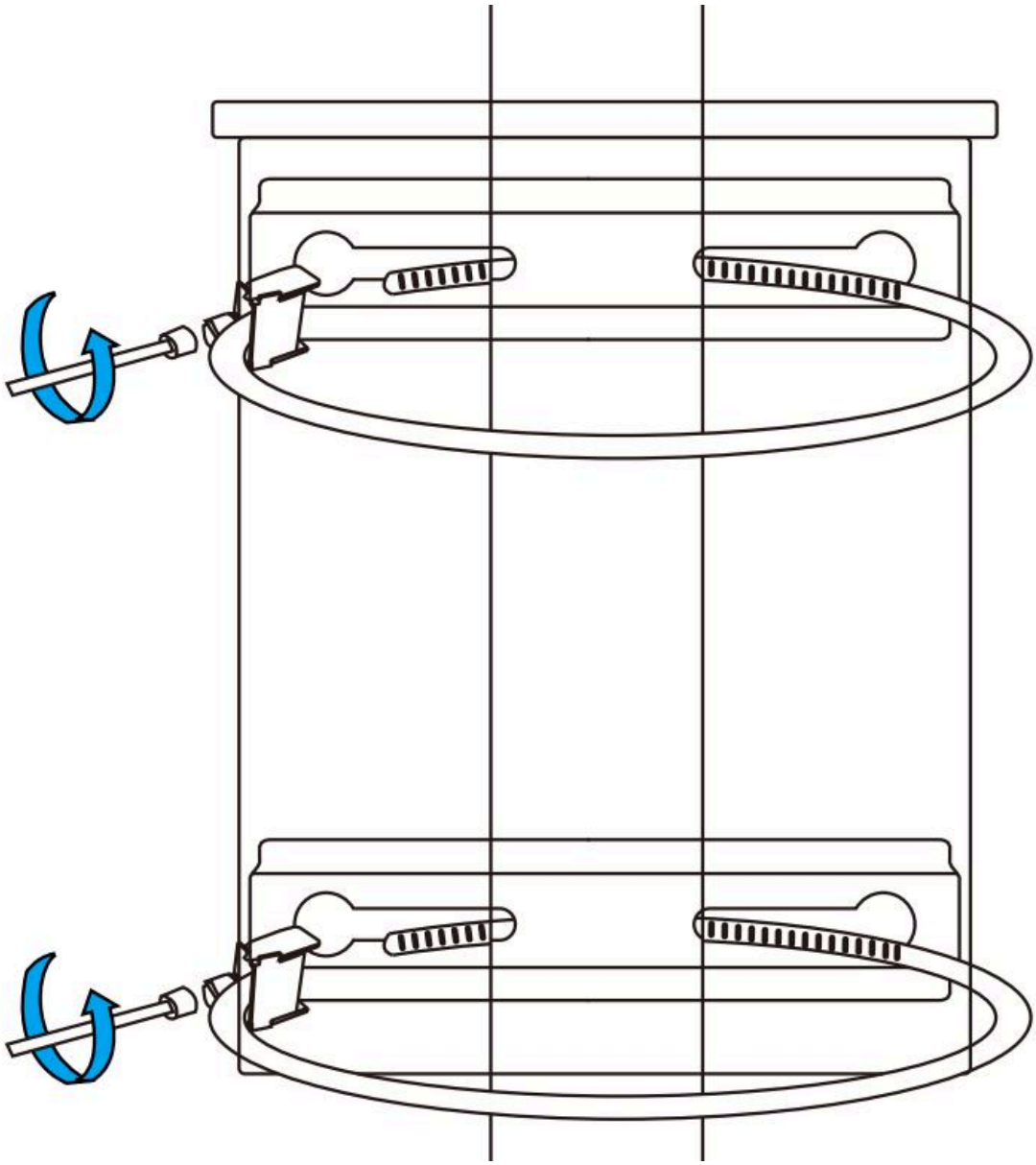

Product dimensions and installation reference

Contact us

Maxsol South Africa

Email

sales@maxsol-tech.com